REVISIONS			
REV	DESCRIPTION	DATE	APPROVED
A	RELEASED		

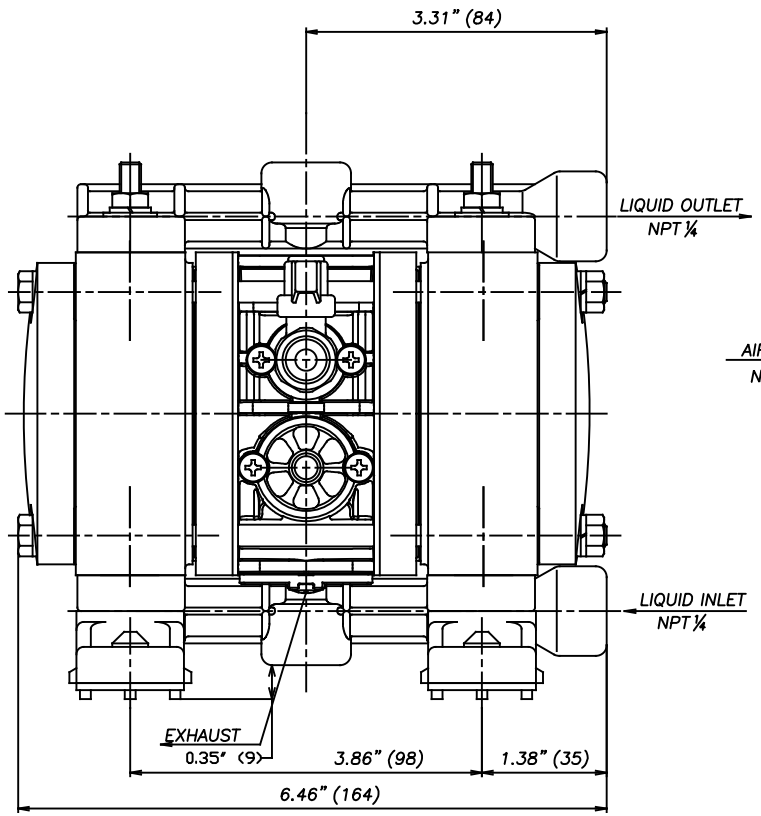

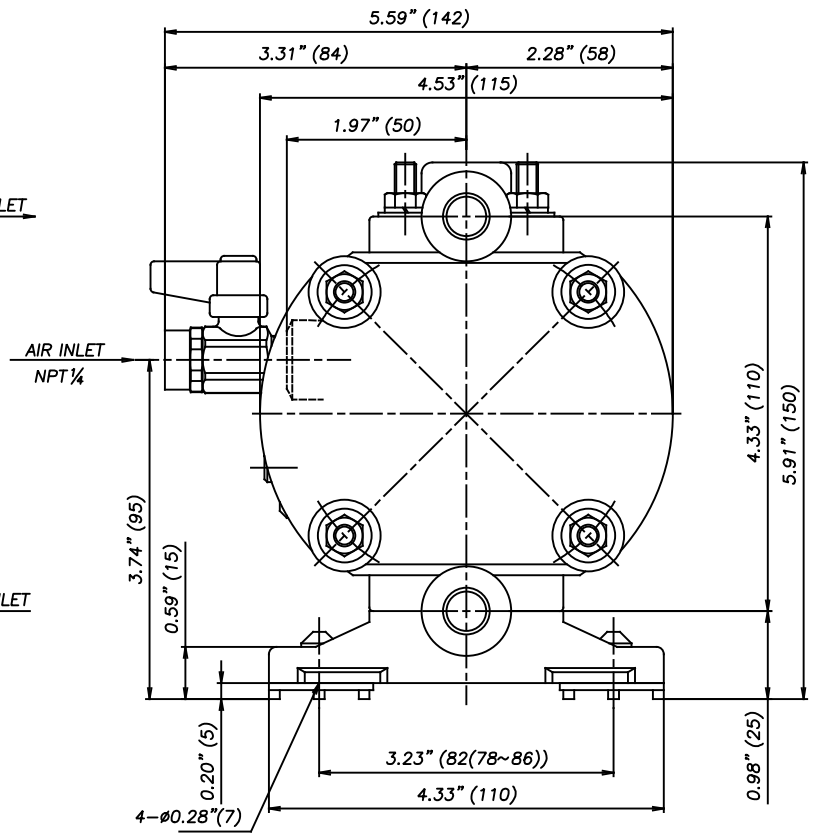

NOTES:
1. SOME FEATURES MAY VARY SLIGHTLY.

PROPRIETARY

THIS DRAWING CONTAINS CONFIDENTIAL INFORMATION PROPRIETARY TO IWAKI AMERICA. IT MUST NOT BE REPRODUCED OR FORWARDED TO OTHERS OR USED IN ANY OTHER WAY, IN WHOLE OR IN PART, UNLESS AUTHORIZED IN WRITING BY IWAKI AMERICA.

TOLERANCES

DIMENSIONS IN INCHES (MM)

UNLESS OTHERWISE NOTED
X = .050
.XX = .010
.XXX = .00

DEBURR AND BREAK ALL SHARP EDGES

IWAKI AIR
www.IwakiAir.com
5 Boynton Rd.
Hopping Brook Park
Holliston, MA 01746
(508) 429-1440

MATERIAL					
SEE CHART					
BY: BW	DATE: 3/13/2026	SIZE: B	DWG NO.: TC-X00218	DESCRIPTION: TC-X051PTN	REV: A
APPROVED	DATE	SCALE: FULL	THIRD ANGLE PROJECTION	SHEET: 1 OF 1	